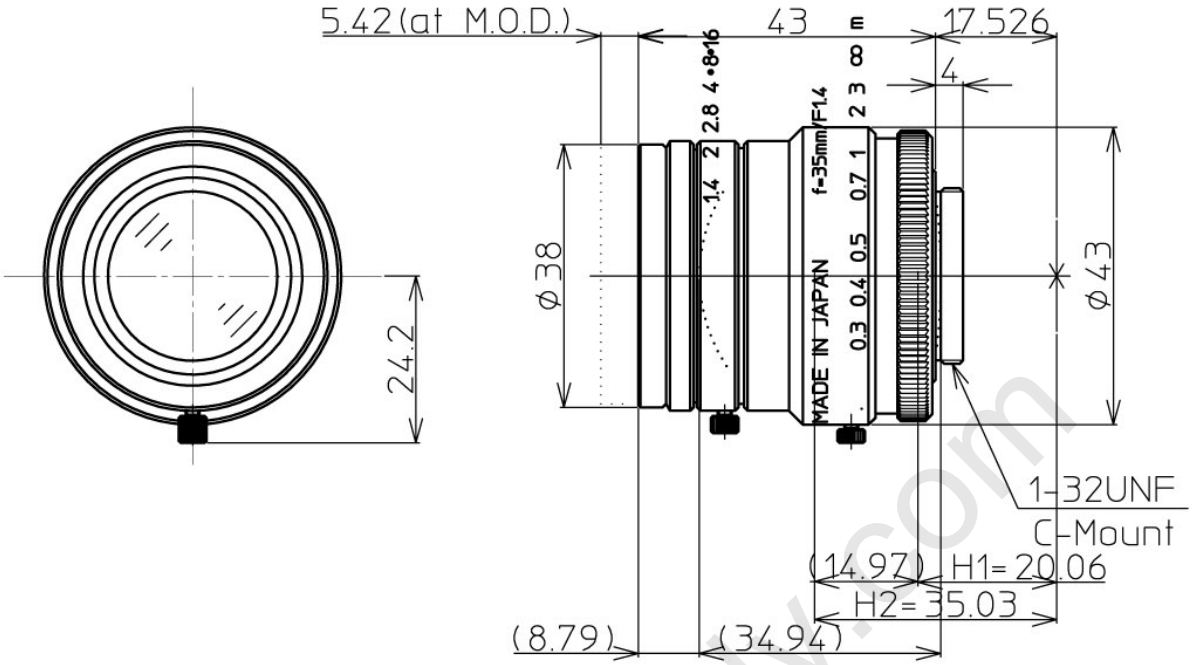

1" 1.4/35mm		2/3"	1/2"
FOCAL LENGTH	f=35mm		
MAX. DIAMETER (RATIO)	F=1:1.4~16		
PICTURE SIZE	12.8x9.6mm	8.8x6.6	6.4x4.8
ANGLE VER. ANGLE	15.8°	10.8°	7.85°
HOR. ANGLE	20.9°	14.4°	10.5°
DIA. ANGLE	26.1°	18.0°	13.1°
DISTORTION (TV)	-0.5%	-0.3%	-0.1%
MINIMUM FOCUS DISTANCE	0.4m ~ ∞ (@1500nm)		
FLANGE BACK	17.526 mm in air		
BACK FOCUS	16.8mm in air		
FILTER SCREW SIZE	M35.5x0.5		
FRONT/REAR EFFECTIVE DIA.	Front Ø24.3mm Rear Ø19.1mm		
MOUNT	C-MOUNT		
EXIT PUPIL	-57.9mm		
TEMPERATURE RANGE	-10~+50° C		
STORAGE TEMPERATURE RANGE	-20~+60° C		
RESOLUTION	Center 120lp/mm Corner 80lp/mm		
WEIGHT	130g		

Kowa

2011.06.07

LM35HC-SW

1" F1.4 f=35mm

Distributed By: Audio Video Supply -- Tel: 1-800-284-2288 -- www.avsupply.com

www.avsupply.com

For design help, accessories or pricing, please contact:
sales@avsupply or call: 1-858-565-1101

AUDIO VIDEO SUPPLY
1-800-284-2288 sales@avsupply.com
www.avsupply.com